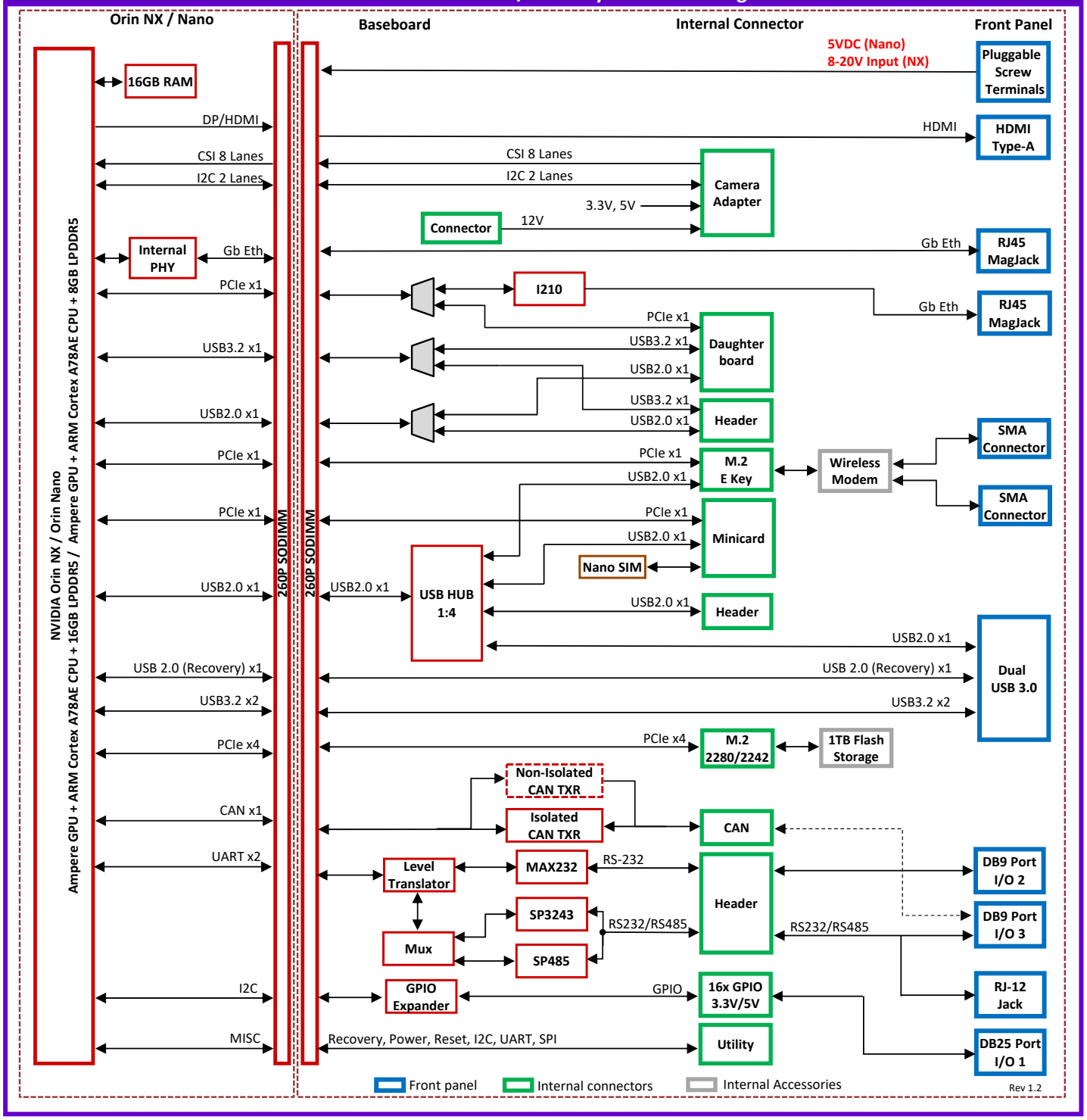Jetbox Jackson Orin NX / Nano System Block Diagram